DRV8801 Single Brushed DC Motor Driver Carrier
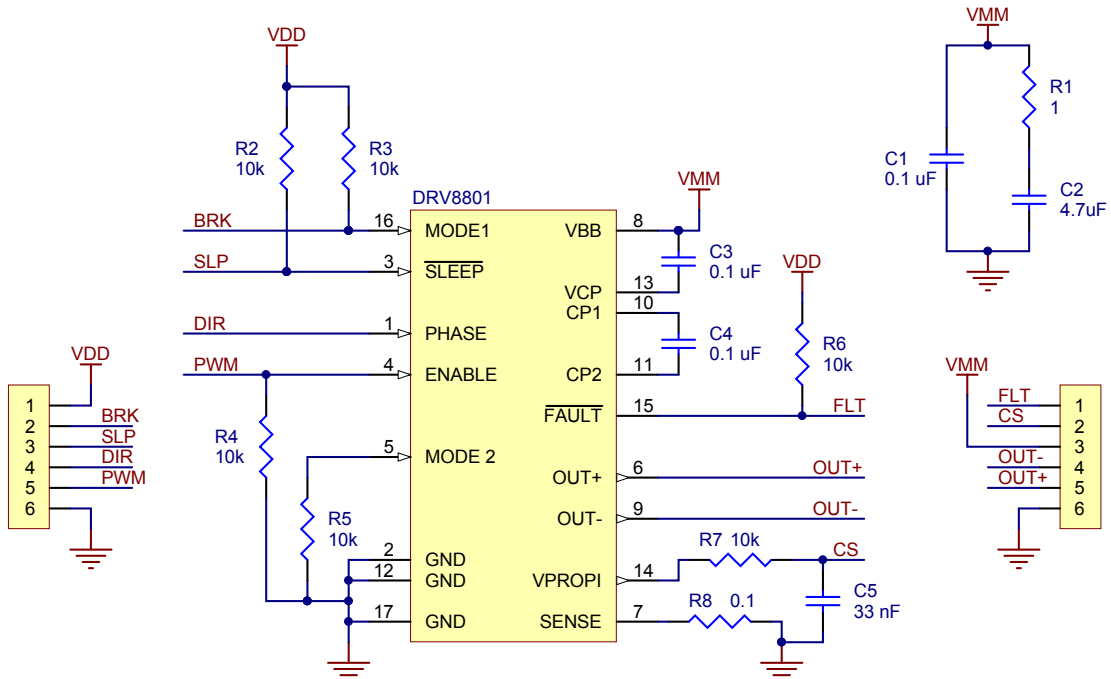
©2013 Pololu Corporation
www.pololu.com